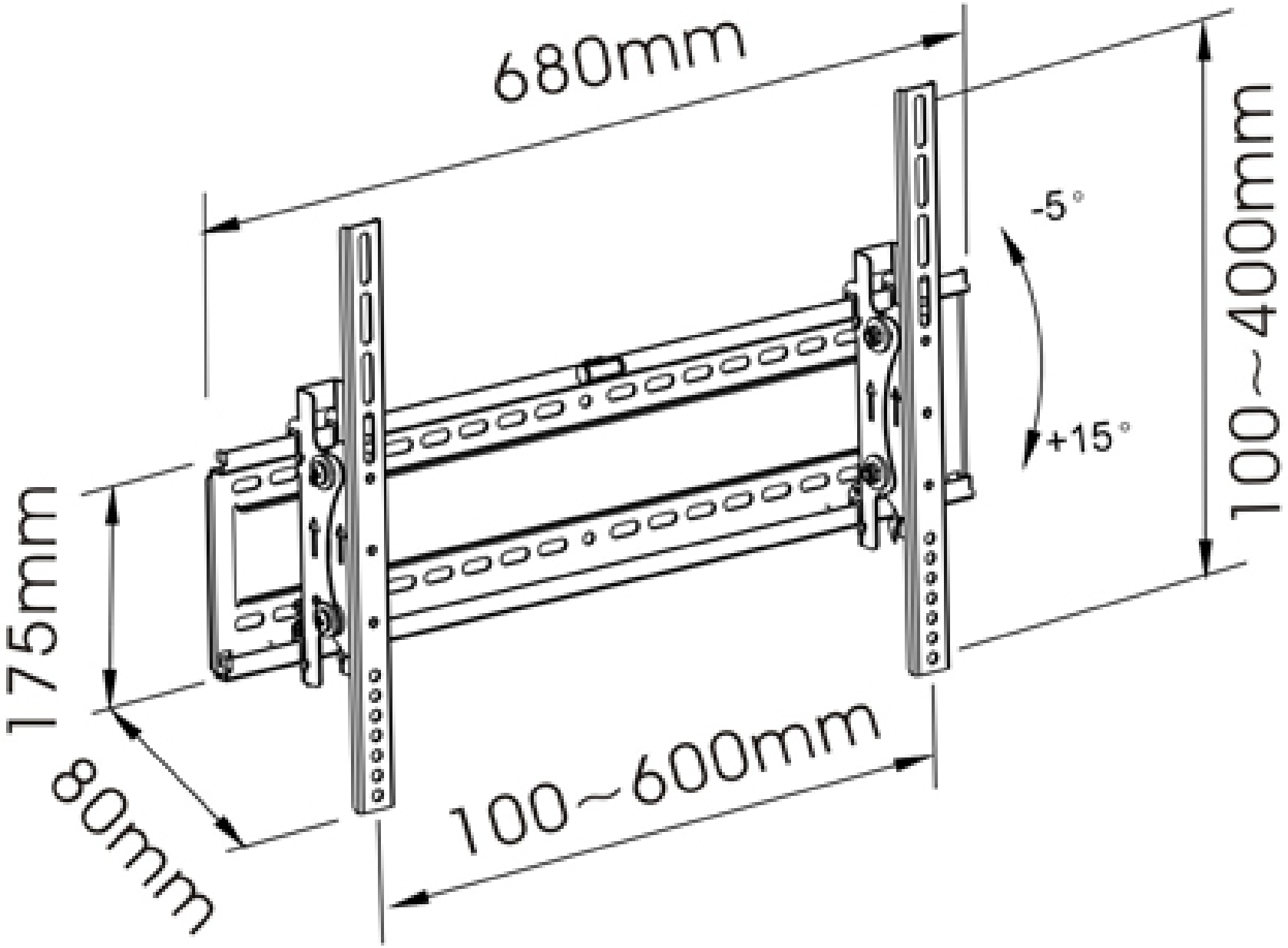
175mm
80mm
680mm
100~600mm
-5°
+15°
100~400mm